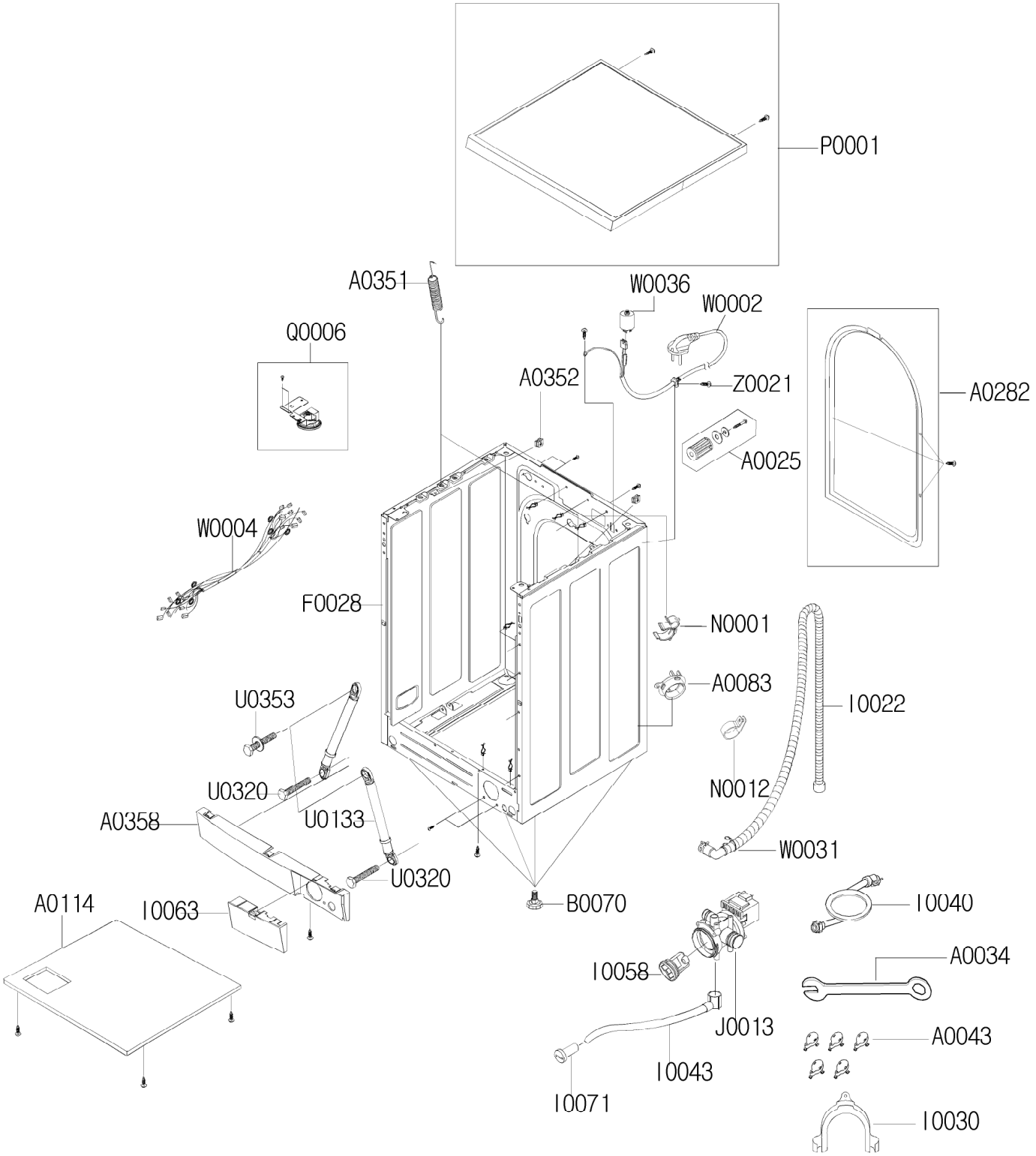
P0001
A0351
W0036
W0002
Q0006
A0352
Z0021
A0282
A0025
W0004
F0028
N0001
A0083
I0022
U0353
N0012
U0320
A0358
U0133
W0031
U0320
A0114
I0063
B0070
I0040
I0058
A0034
J0013
A0043
I0043
I0071
I0030

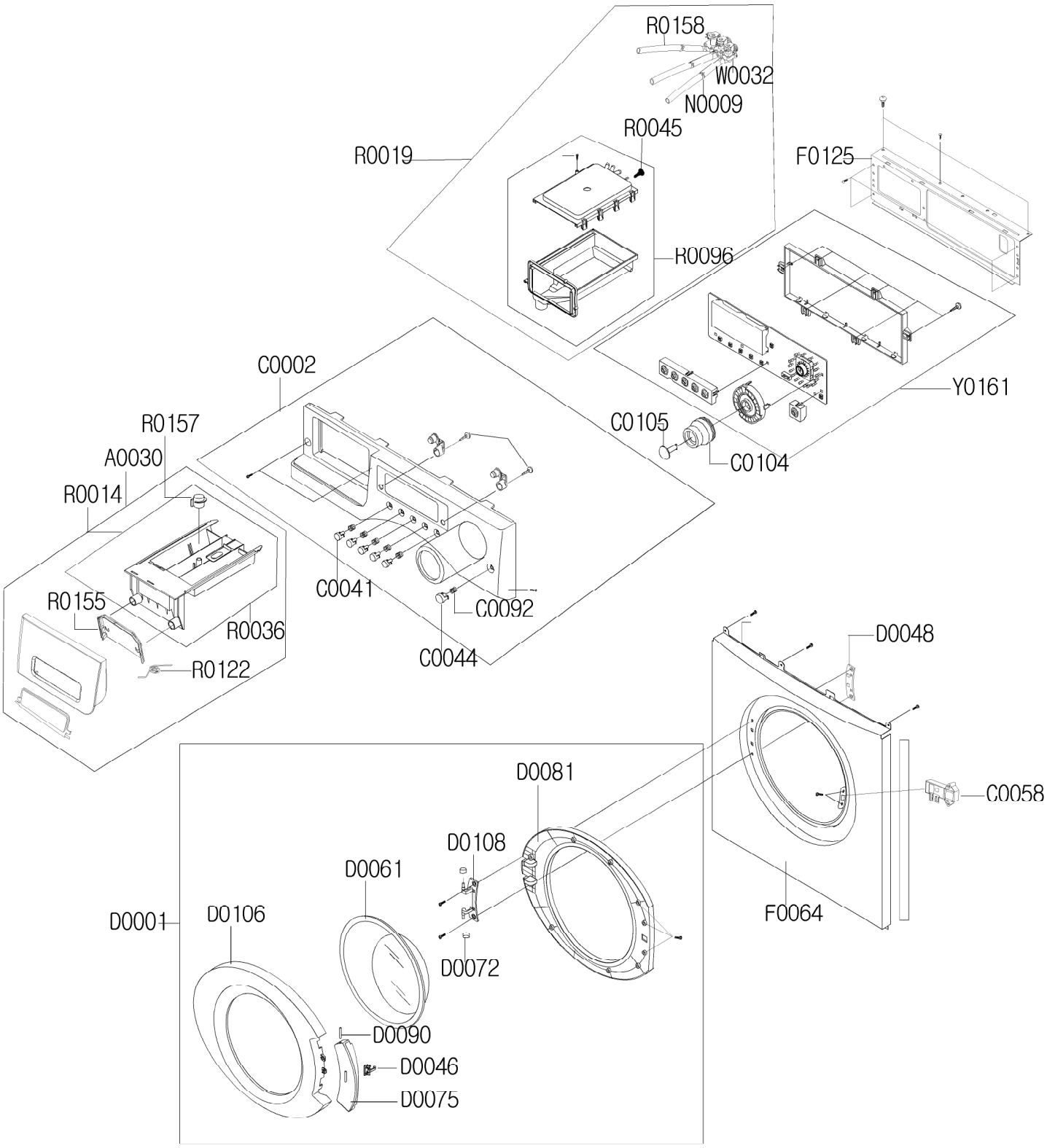
R0158
W0032
N0009
R0045
R0019
F0125
R0096
C0002
Y0161
R0157
C0105
A0030
C0104
R0014
C0041
C0092
R0155
R0036
C0044
R0122
D0048
D0081
C0058
D0108
D0061
D0001
D0106
F0064
D0072
D0090
D0046
D0075

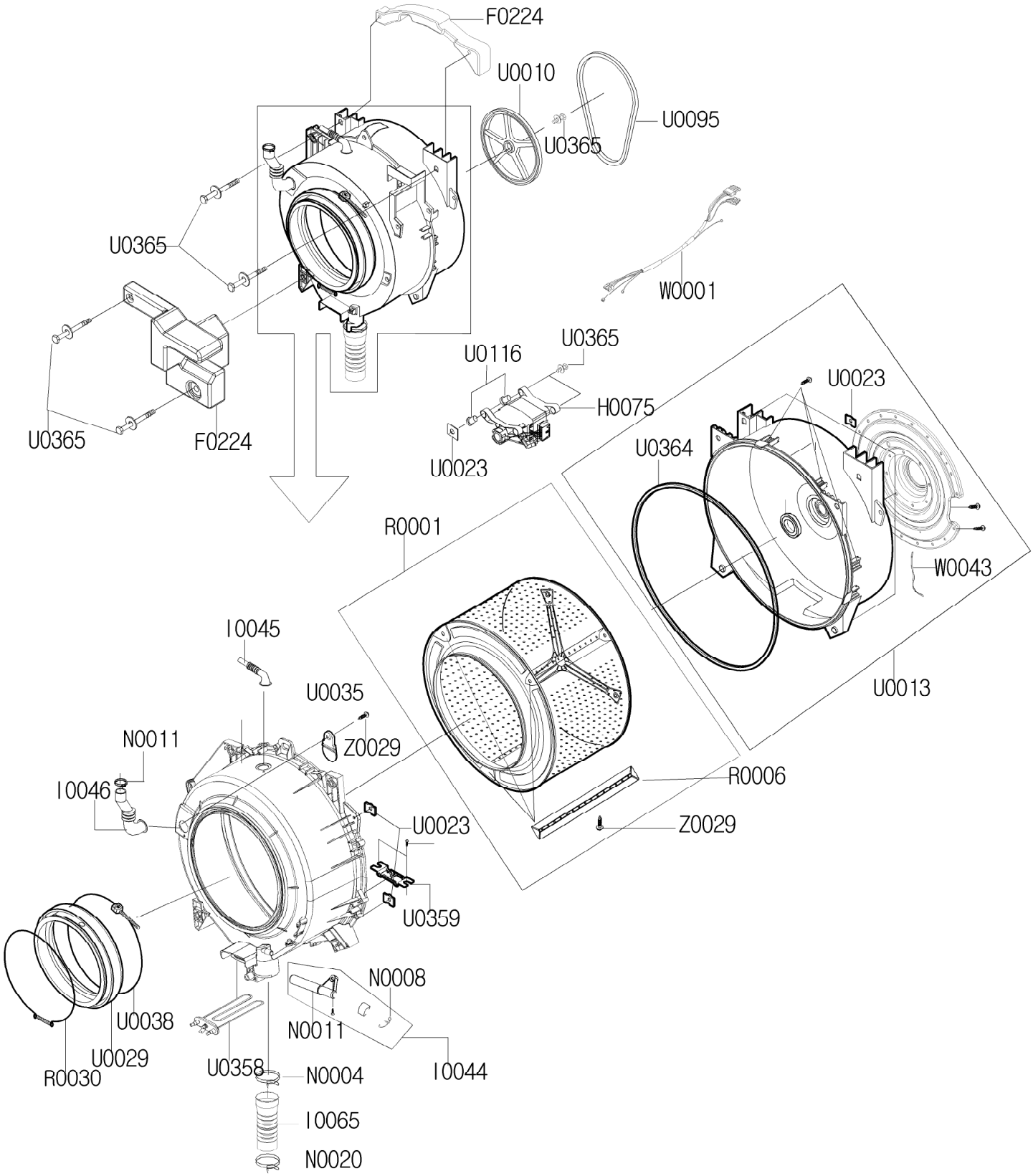
F0224
U0010
U0095
U0365
U0365
W0001
U0365
U0116
U0365
H0075
U0365
F0224
U0023
U0023
U0364
R0001
W0043
I0045
U0035
U0013
N0011
Z0029
I0046
R0006
U0023
Z0029
U0359
N0008
U0038
N0011
U0029
U0358
N0004
I0044
R0030
I0065
N0020