SAMSUNG ELECTRONICS

M1712N/XEC(01 Version)

Electronic ovne - Exploded Views

Main Parts

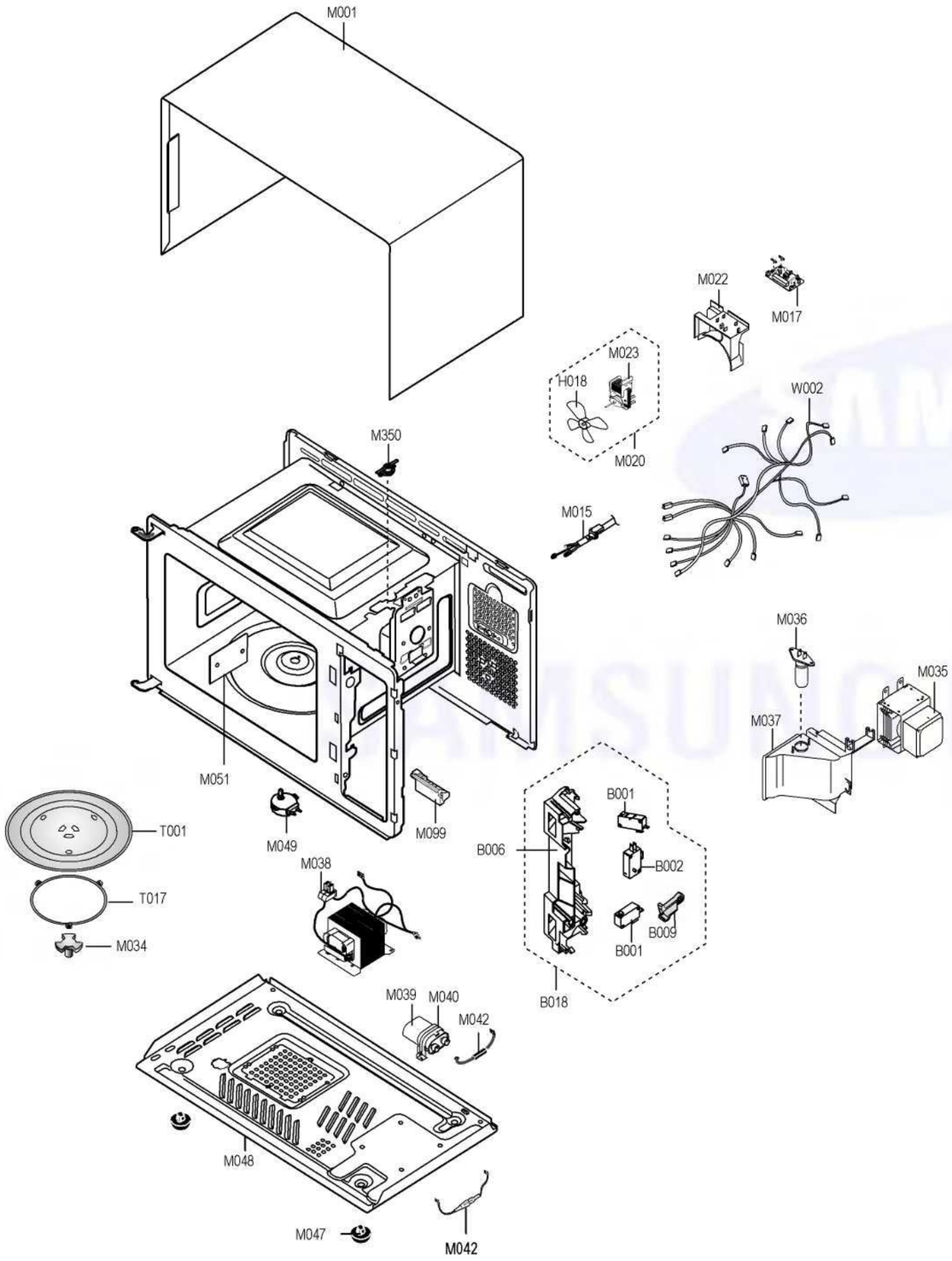

Control Parts

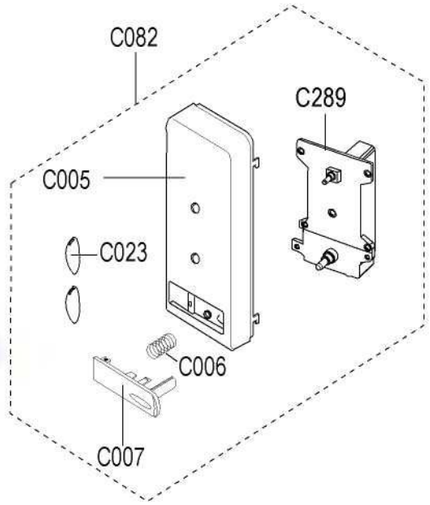

Door Parts

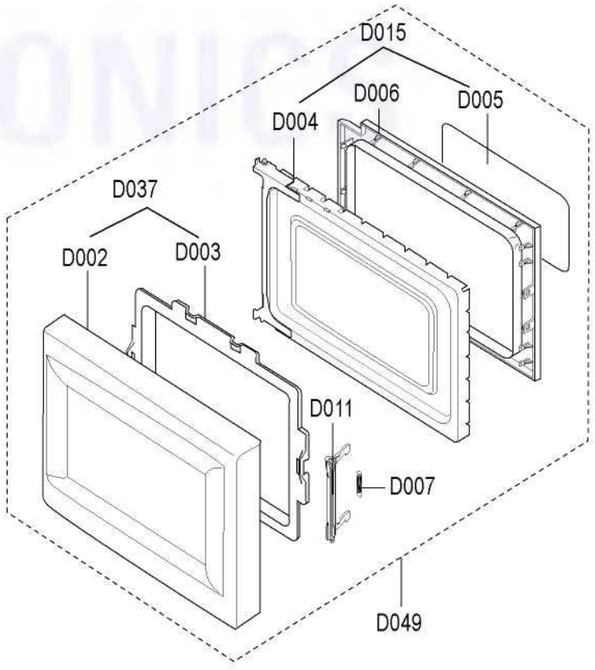

가격09060144제만모델(리칭출력선)▬▬▬▬▬185.20100114182748